CASE FINISH	CURRENT (AMPS)	WORKING VOLTAGE -55°C TO +85°C AC	WORKING VOLTAGE -55°C TO +85°C DC	WORKING VOLTAGE -55°C TO +125°C AC	WORKING VOLTAGE -55°C TO +125°C DC	MAXIMUM DC RESISTANCE (OHMS)	MAXIMUM VOLTAGE DROP DC	MAXIMUM VOLTAGE DROP AC	MINIMUM CAPACITANCE (uF)
SOLDER	3	240@60Hz	450	240@60Hz	400	0.03	0.09	----	0.72

MIN. INSERTION LOSS PER MIL-STD-220 FULL LOAD, +25°C												
14 KHz	30 KHz	50 KHz	75 KHz	100 KHz	150 KHz	300 KHz	500 KHz	1 MHz	10 MHz	100 MHz	1 GHz	10 GHz
--	--	--	6	--	31	55	--	70	70	70	70	--

PART MARKING:

51-321-318
SCI DATE CODE

PACKAGE MARKING:

STANDARD

MARKING NOTES:

N/A

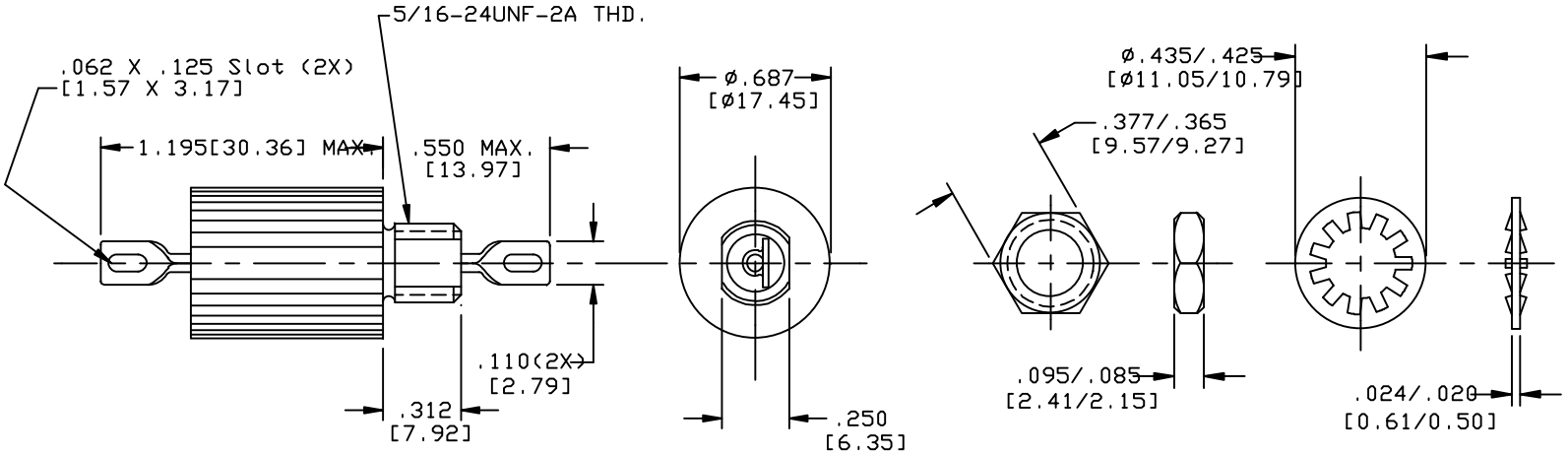

SCHEMATIC

MTG. HARDWARE

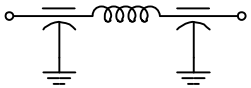

NOTES:

1) MOUNTING TORQUE NOT TO EXCEED 7in-lbs.

CN. 172081	33	REV. NO.	CHANGE NOTICE	UNLESS OTHERWISE SPECIFIED DIMENSIONS ARE IN INCHES. [MILLIMETERS] DO NOT SCALE.	TOLERANCES UNLESS OTHERWISE SPECIFIED Fractions Dec. .xx± Dec. .xxx±010 Angles ±0° 30' CODE IDENT. NO. OLSP2

SPECTRUM CONTROL INC.

ERIE, FAIRVIEW PENNSYLVANIA

Dwn KAUFFMAN
Ckd 3-12-96
Apvd.
Sheet 1 of 1

Description Low Pass EMI Filter

51-321-318

Quality Products From The Specialists In Electro-Magnetic Compatibility