| CASE FINISH | CURRENT (AMPS) | WORKING VOLTAGE | | | | MAXIMUM DC RESISTANCE (OHMS) | MAXIMUM VOLTAGE DROP | | MINIMUM CAPACITANCE (uF) | MIN. INSERTION LOSS PER MIL-STD-220, FULL LOAD, +25°C | | | | | | | | | | | | |
|---|---|---|---|---|---|---|---|---|---|---|---|---|---|---|---|---|---|---|---|---|---|---|
| | | -55°C TO +85°C | | -55°C TO +125°C | | | | | | | | | | | | | | | | | | |
| | | AC | DC | AC | DC | | DC | AC | | 14 KHz | 30 KHz | 50 KHz | 75 KHz | 100 KHz | 150 KHz | 300 KHz | 500 KHz | 1 MHz | 10 MHz | 100 MHz | 1 GHz | 10 GHz |
| SOLDER | 15 | 240 | 450 | 240(400Hz) | 400 | 0.005 | 0.075 | -- | 0.250 | -- | -- | -- | -- | 10 | 14 | 19 | -- | 30 | 50 | 70 | 70 | -- |

PART MARKING:

SCI-9932-100-6005
DATE CODE

PACKAGE MARKING:

STANDARD

MARKING NOTES:

N/A

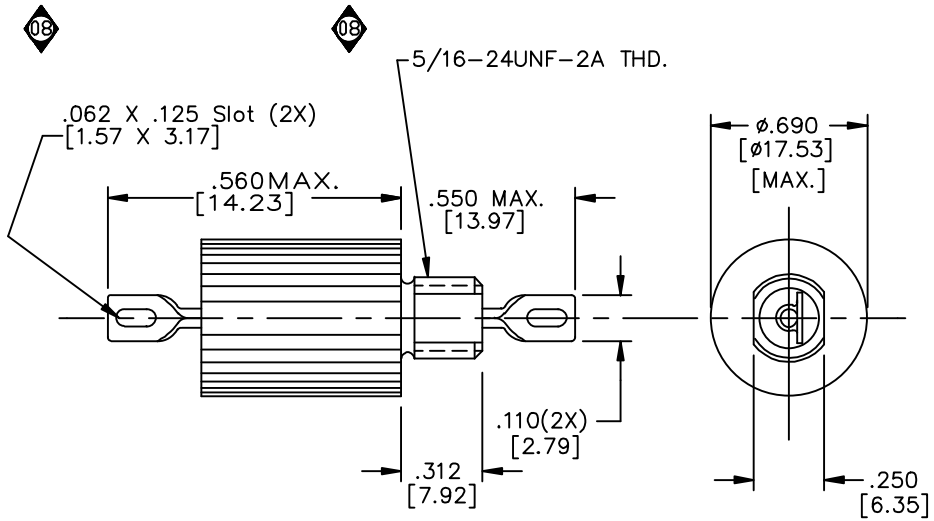


SCHEMATIC

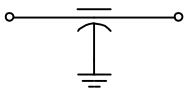

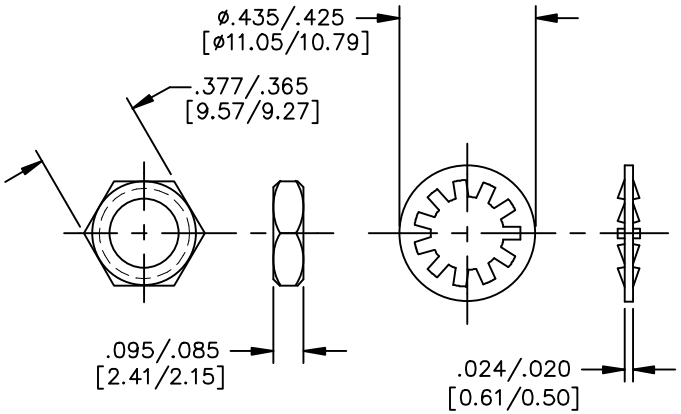


MTG. HARDWARE

NOTES:

1) MOUNTING TORQUE NOT TO EXCEED 7in-lbs.

| REV. NO. | CHANGE NOTICE |
|---|---|
| 08 | CN. 18360-CPD |
| 07 | CN. 185361 |
| 06 | CN. 183602 |

UNLESS OTHERWISE SPECIFIED DIMENSIONS ARE IN INCHES. [MILLIMETERS]

DO NOT SCALE.

TOLERANCES UNLESS OTHERWISE SPECIFIED
Fractions ±
Dec. .xx±
Dec. .xxx± .010
Angles ±0° 30'

CODE IDENT. NO. OLSP2

SPECTRUM CONTROL INC.

ERIE, FAIRVIEW PENNSYLVANIA

Dwn. MAYNARD
Ckd. 3/6/98

Description Low Pass EMI Filter

Sheet 1 of 1

9932-100-6005

Quality Products From The Specialists In Electro-Magnetic Compatibility