crydom
www.crydom.com

HK-4 STAND UP OUTPUT TERMINAL

REV. DATE	For Technical Support:
12/07/13	support@crydom.com support-europe@crydom.com

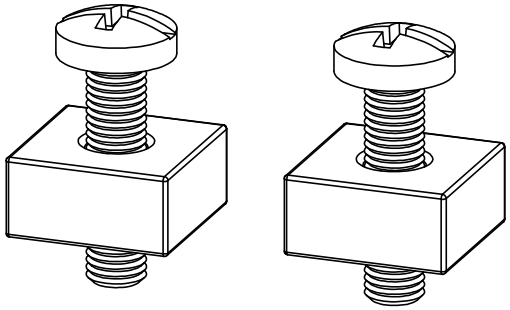

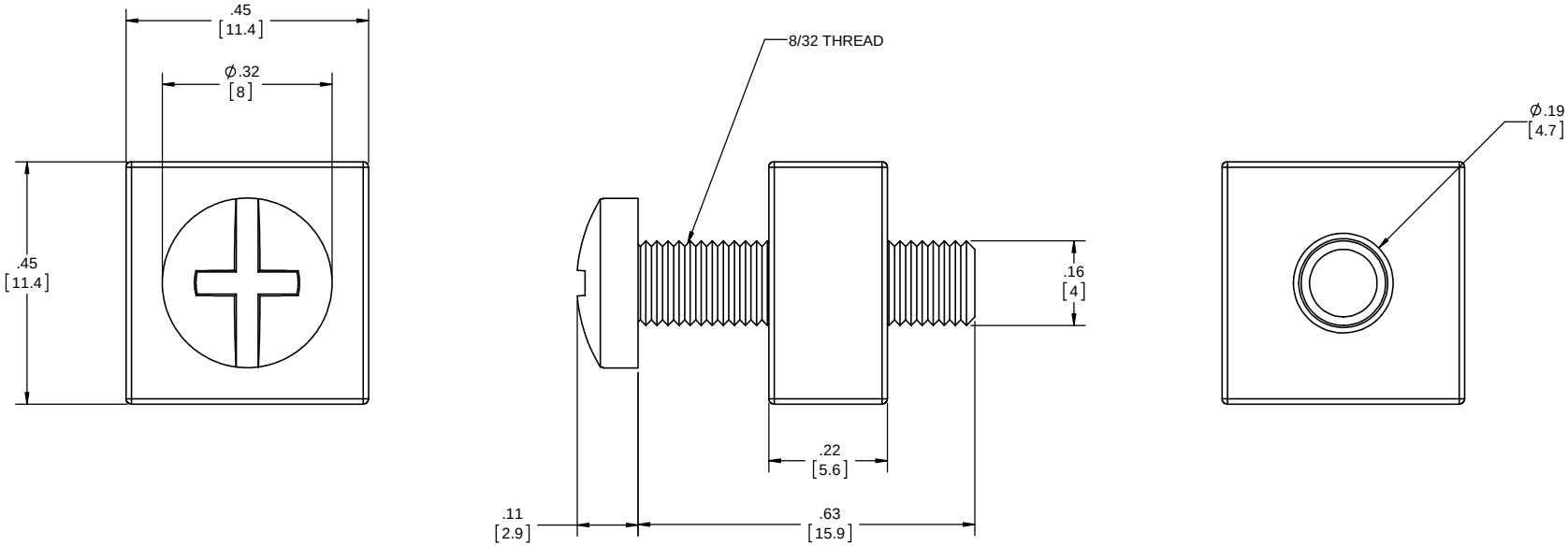

Tolerances: ± 0.02 in / 0.5 mm. All dimensions are in: inches [millimeters]