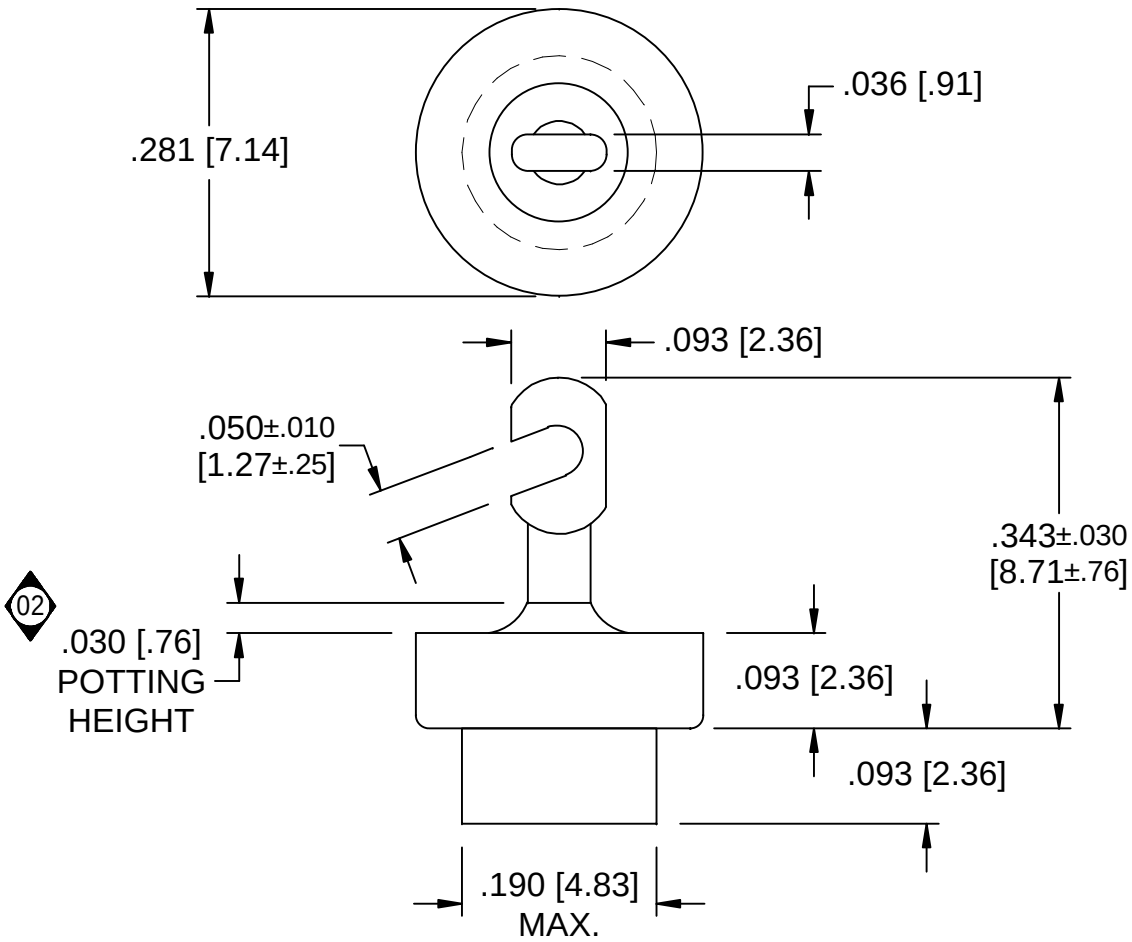

LEAD FINISH	SILVER
BUSHING FINISH	SILVER
CAPACITANCE	1000pF + 100 / -0%
TEMP. RANGE	-55°C TO +125°C
CURRENT	25 AMPS MAX.
WORKING VOLTAGE	85°C VCD MAX. 125°C 250 VDC MAX.
DC RESISTANCE	.01 ohms MAX.

MIN. I.L. PER MIL-STD-220 AT 25°C NO LOAD

FREQ. MHz	I.L. (db)
1	N/A
100	15
300	25
1 GHz	35
10 GHz	40

SCHEMATIC

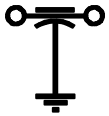

MARKING:

PART: NONE

BAG: 54F-803-017
LOT # _____
DATE CODE
QTY/BAG (50 MAX.)

NOTES:
1. SUGGESTED MOUNTING HOLE = ø.191[4.86]
2. PRE FLATTEN/NOTCH DIMENSIONS
   TOP: .323±.010
3. THIS PRODUCT IS LEAD FREE.
4. MAX REFLOW TEMP IS 245°C FOR 5 SECONDS.
5. PREFORM IS SUPPLIES AS HARDWARE.

RoHS COMPLIANT

REV NO	CHANGE NOTICE
02	CN 41159-ENG
01	CN 35659-ENG
00	CN 25130-CPD

UNLESS OTHERWISE SPECIFIED DIMENSIONS ARE IN INCHES [MILLIMETERS]

DO NOT SCALE

THIRD ANGLE PROJECTION

TOLERANCES UNLESS OTHERWISE SPECIFIED
DECIMAL .X ± .030
DECIMAL .XX ± .010
DECIMAL .XXX ± .005
ANGLES ± 0° 30'

CODE IDENT. NUMBER 0LSP2

SPECTRUM CONTROL INC.

FAIRVIEW PENNSYLVANIA

DWN. Kauffman
DATE 4-9-08
ENGR. SACKETT
SHEET 1 OF 1

STANDOFF CERAMIC FILTER

54F-803-017
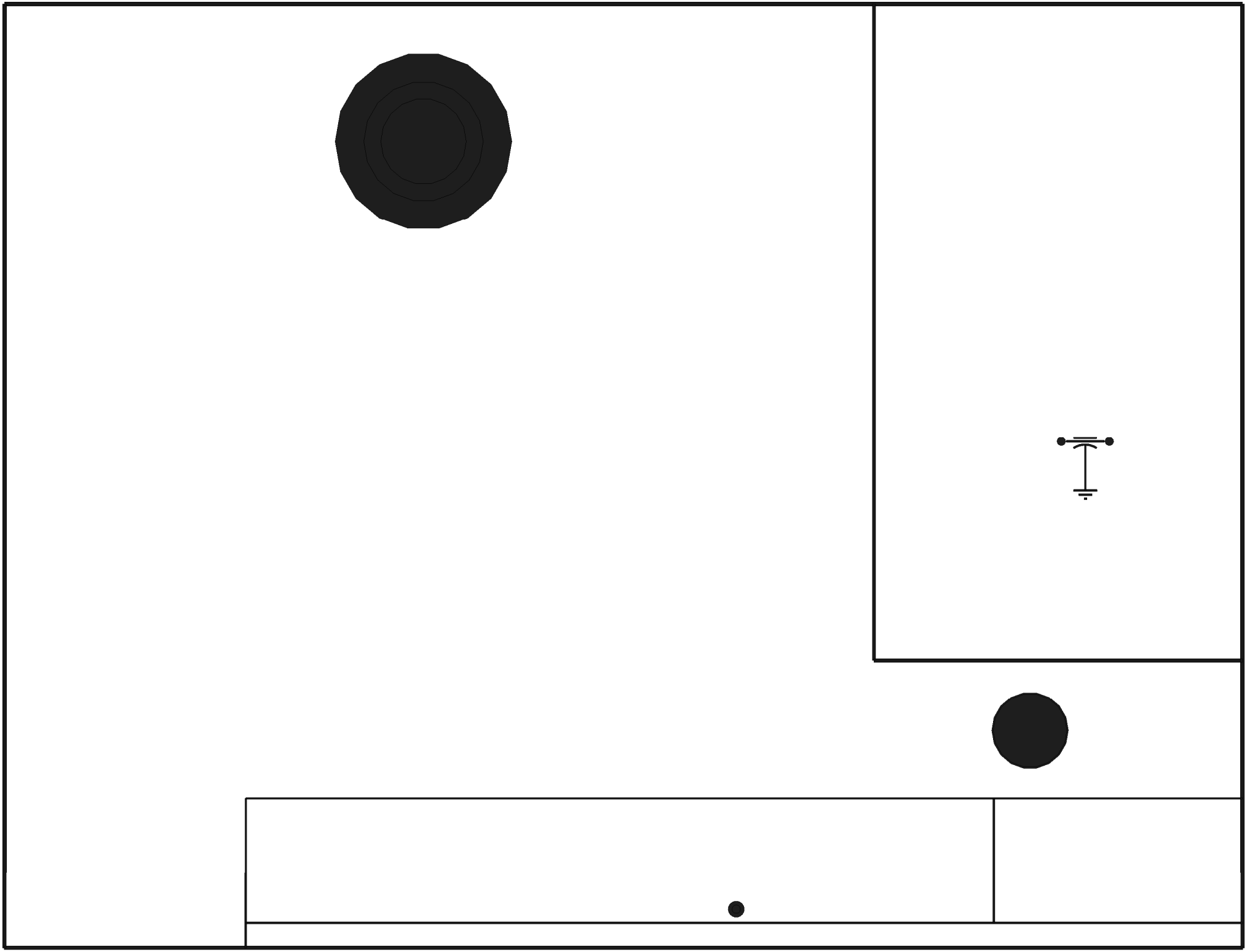
Quality Products From The Specialists In Electro—Magnetic Compatibility