CASE FINISH	CURRENT (AMPS)	WORKING VOLTAGE				MAXIMUM DC RESISTANCE (OHMS)	MAXIMUM VOLTAGE DROP		MINIMUM CAPACITANCE (uF)	MIN. INSERTION LOSS PER MIL-STD-220, FULL LOAD, +25°C												
		-55°C TO +85°C		-55°C TO +125°C																		
		AC	DC	AC	DC		DC	AC		14 KHz	30 KHz	50 KHz	75 KHz	100 KHz	150 KHz	300 KHz	500 KHz	1 MHz	10 MHz	100 MHz	1 GHz	10 GHz
SOLDER	2	--	--	125(400Hz)	150	0.1 (OHMS)	0.20	0.20	--	--	--	--	--	--	13	21	--	43	70	--	70	--

PART MARKING:

DATE CODE 0LSP2
M15733 / 260012
51-351-604

125 VAC400Hz
150VDC2A125C

SCHEMATIC

PACKAGE MARKING:

STANDARD

MARKING NOTES:

N/A

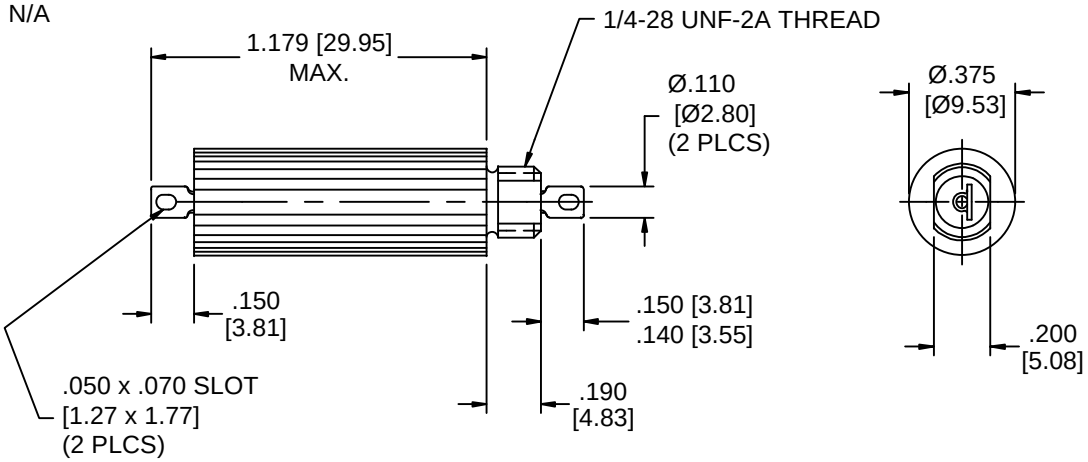

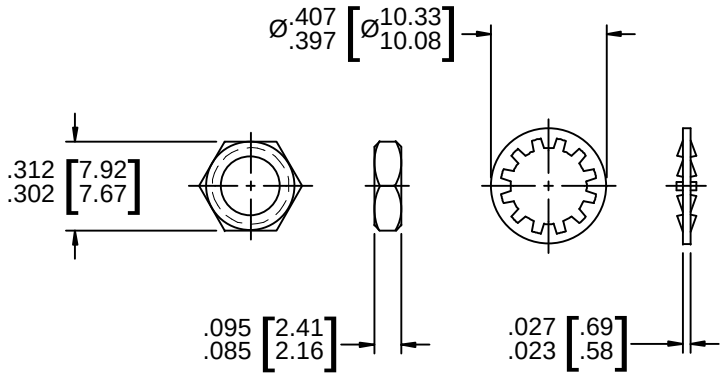

MTG. HARDWARE

35 THIS PART IS CODED **"NCA".** SPECTRUM CONTROL, INC. DOES NOT HAVE CHANGE AUTHORITY. CUSTOMER APPROVAL REQUIRED BEFORE PRODUCT / PROCESS CHANGES CAN BE MADE.

NOTES:

1) MOUNTING TORQUE NOT TO EXCEED 7 in-lbs.

REV. NO.	CHANGE NOTICE
35	CN 59046-ENG
34	CN 38680-ENG
	REDRAWN
33	CN 188123
32	CN 185489
31	CN 183731

UNLESS OTHERWISE SPECIFIED DIMENSIONS ARE IN INCHES [MILLIMETERS]
DO NOT SCALE
THIRD ANGLE PROJECTION

TOLERANCES UNLESS OTHERWISE SPECIFIED
Dec. .x ± .x
Dec. .xx ± .xx
Dec. .xxx ± .010 [.25]
Angles ± 0° 30"

CODE IDENT. NO. 0LSP2

SPECTRUM CONTROL INC.

FAIRVIEW PENNSYLVANIA

Dwn. Hassett
Date 12-11-07
Engr. J. Kraus
Sheet 1 of 1

Description: LOW PASS EMI FILTER

51-351-604

Quality Products From The Specialists In Electro—Magnetic Compatibility