CASE FINISH	CURRENT (AMPS)	WORKING VOLTAGE				MAXIMUM DC RESISTANCE (OHMS)	MAXIMUM VOLTAGE DROP		MINIMUM CAPACITANCE (uF)	MIN. INSERTION LOSS PER MIL-STD-220, FULL LOAD, +25°C												
		-55°C TO +85°C		-55°C TO +125°C						14 KHz	30 KHz	50 KHz	75 KHz	100 KHz	150 KHz	300 KHz	500 KHz	1 MHz	10 MHz	100 MHz	1 GHz	10 GHz
		AC	DC	AC	DC		DC	AC														
SOLDER	15	---	100	---	50	0.005	0.075	---	1.2	--	15	--	--	--	28	34	--	44	60	70	70	70

PART MARKING:

M15733/49-0007
L OLSP2 DATE CODE

PACKAGE MARKING:

M15733/49-0007
L2 OLSP2 DATE CODE
50VDC 15A @ 125°C
51-359-055

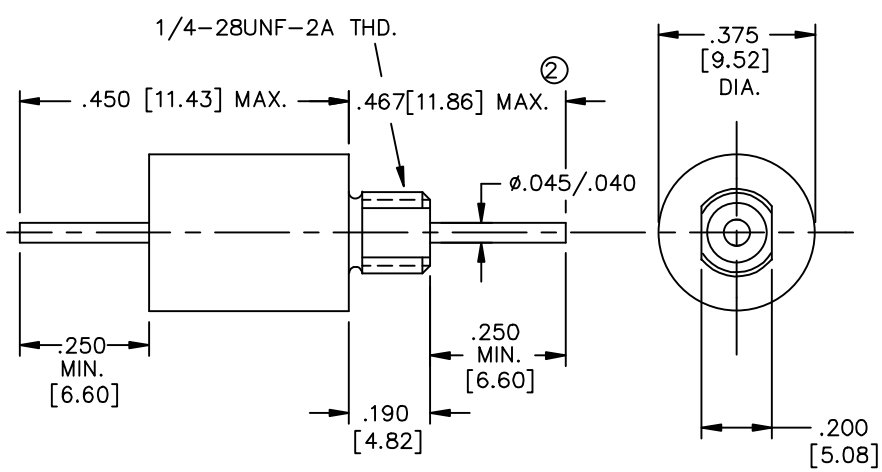

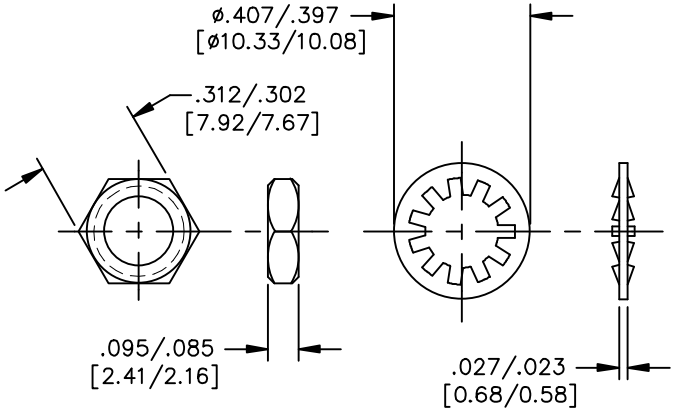

MTG. HARDWARE

MARKING NOTES:

N/A

SCHEMATIC

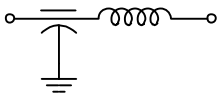

NOTES:

1) MOUNTING TORQUE NOT TO EXCEED 7in-lbs.
② .467 MAX DIM INCLUDES SOLDER COVERAGE
45 3) THIS PART CODED "NCA". API TECHNOLOGIES DOES NOT HAVE CHANGE AUTHORITY. CUSTOMER APPROVAL REQUIRED BEFORE PRODUCT/PROCESS CHANGES CAN BE MADE.

REV. NO.	CHANGE NOTICE
45	CN 63455-ENG
44	CN. 210009
43	CN. 204968
42	CN. 202445
41	CN. 176908

UNLESS OTHERWISE SPECIFIED DIMENSIONS ARE IN INCHES. [MILLIMETERS]
DO NOT SCALE.

TOLERANCES UNLESS OTHERWISE SPECIFIED
Fractions ±
Dec. .xx±
Dec. .xxx± .010
Angles ±0° 30'
CODE IDENT. NO. OLSP2

api technologies corp.
FAIRVIEW PENNSYLVANIA

Dwn. KEVERLINE
Date 4-20-12
Engr. M. STADLER
Sheet 1 of 1

Description Low Pass EMI Filter

51-359-055

Quality Products From The Specialists In Electro-Magnetic Compatibility