crydom
www.crydom.com

KS100 PROTECTIVE COVER

REV. DATE	For Technical Support:
11/13/10	support@crydom.com support-europe@crydom.com

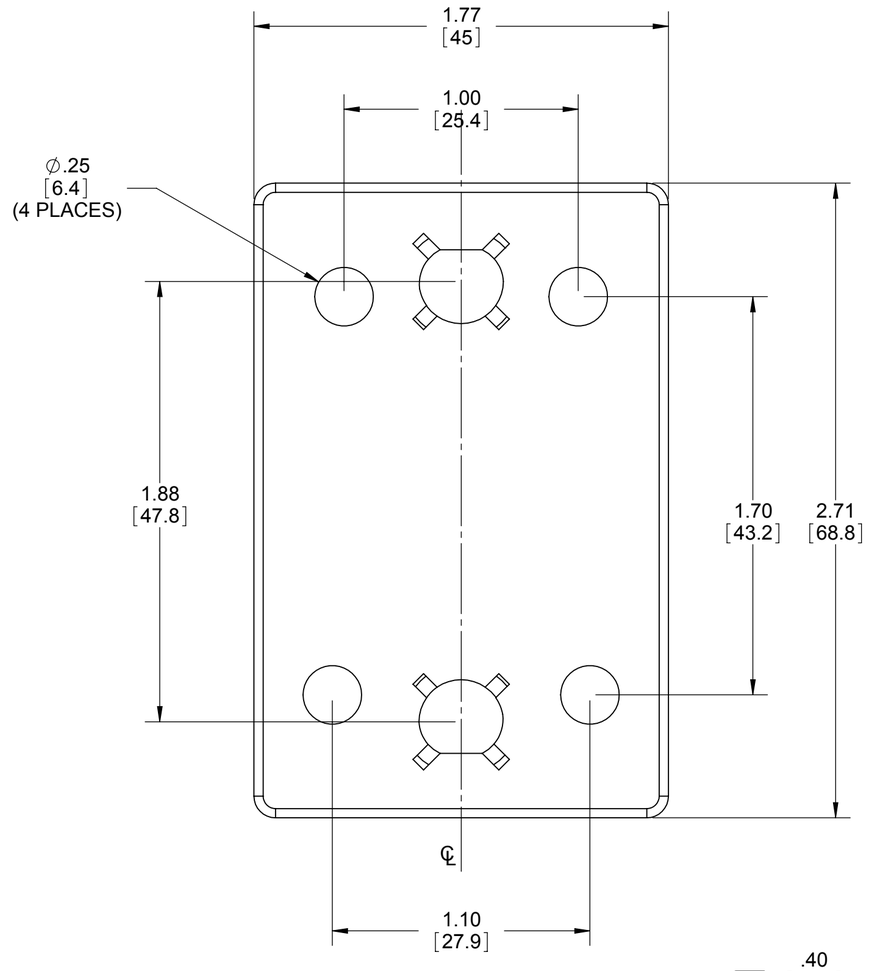

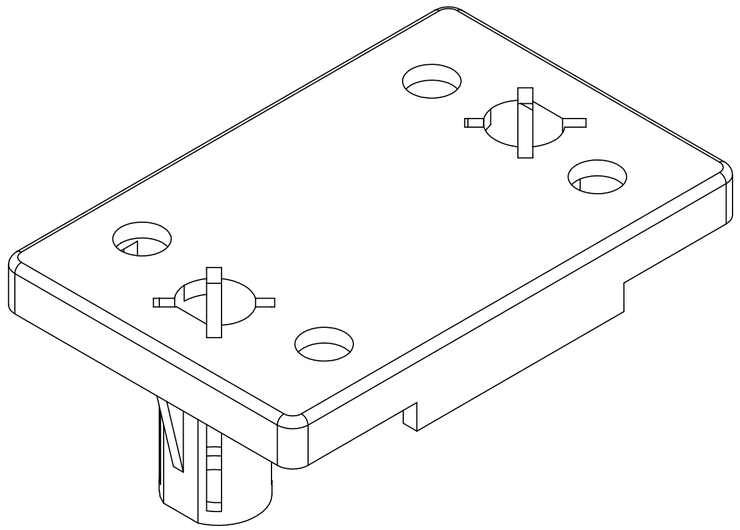

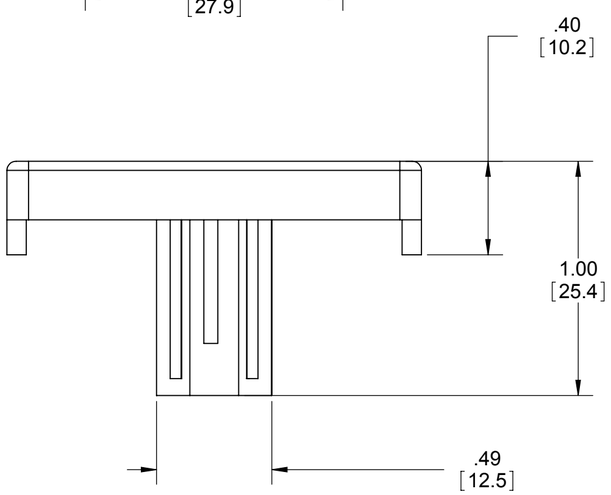

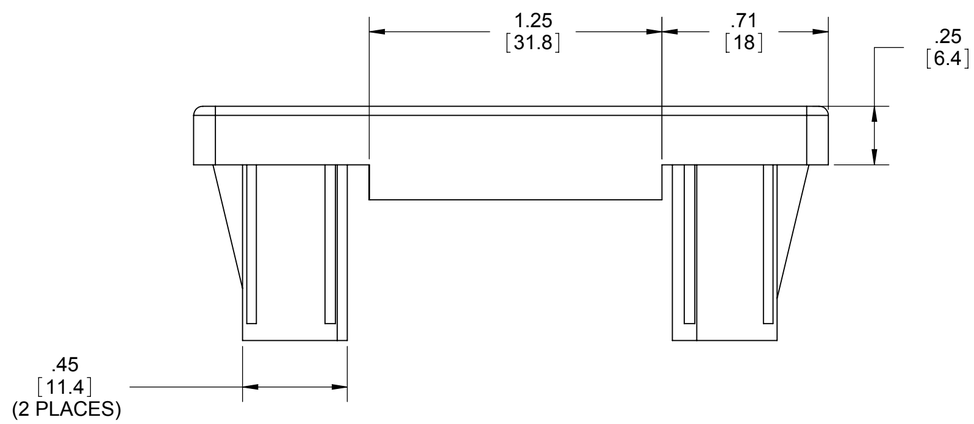

Tolerances: ± 0.02 in / 0.5 mm. All dimensions are in: inches [millimeters]