CASE FINISH	CURRENT (AMPS)	WORKING VOLTAGE				MAXIMUM DC RESISTANCE (OHMS)	MAXIMUM VOLTAGE DROP		MINIMUM CAPACITANCE (uF)	MIN. INSERTION LOSS PER MIL-STD-220, FULL LOAD, +25°C												
		-55°C TO +85°C		-55°C TO +125°C																		
		AC	DC	AC	DC		DC	AC		14 KHz	30 KHz	50 KHz	75 KHz	100 KHz	150 KHz	300 KHz	500 KHz	1 MHz	10 MHz	100 MHz	1 GHz	2 GHz
SOLDER	5.0	125	150	125	150	.015	.075	.075	0.25	--	--	--	--	--	8	14	--	25	58	--	70	70

28

PART MARKING:

M15733/26-0007
C OLSP2 DATE CODE
125VAC 400Hz
150VDC 5A 125°C
51-353-080

PACKAGE MARKING:

STANDARD

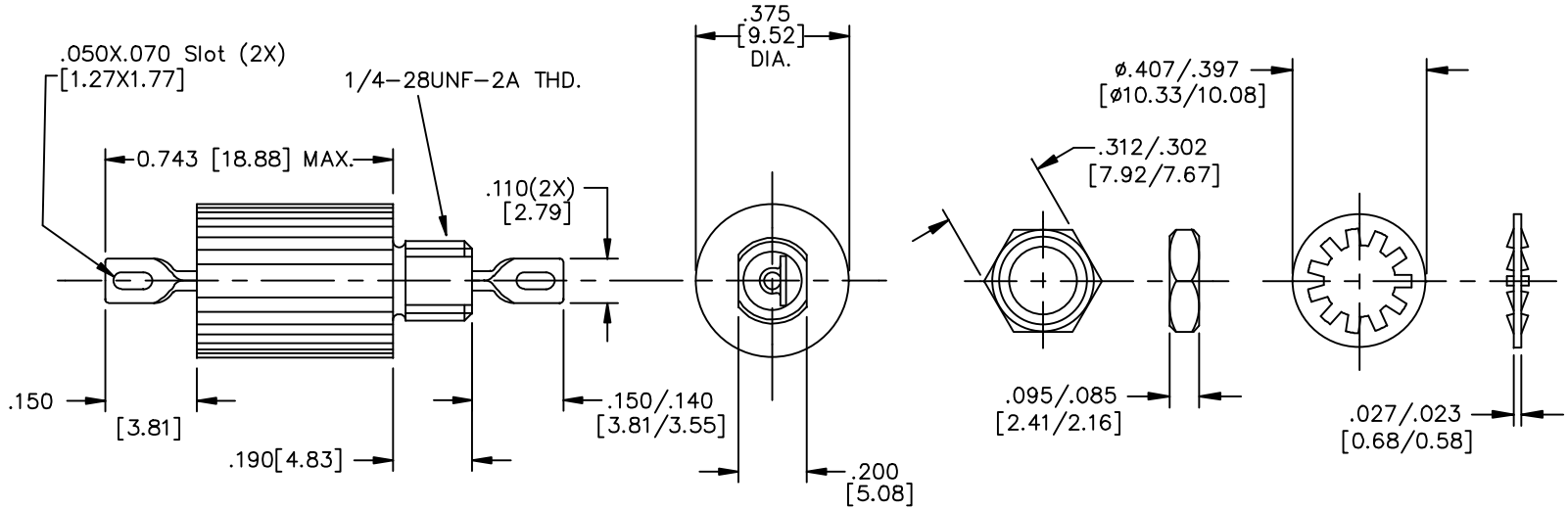

MTG. HARDWARE

MARKING NOTES:

N/A

SCHEMATIC

NOTES:

1) MOUNTING TORQUE NOT TO EXCEED 7in-lbs.

REV. NO.	CHANGE NOTICE
28	CN 38679-ENG
27	CN 186913
26	CN 182331

UNLESS OTHERWISE SPECIFIED DIMENSIONS ARE IN INCHES. [MILLIMETERS]

DO NOT SCALE.

TOLERANCES UNLESS OTHERWISE SPECIFIED
Fractions ±
Dec. .xx±
Dec. .xxx± .010
Angles ±0° 30'

CODE IDENT. NO. OLSP2

SPECTRUM CONTROL INC.

FAIRVIEW PENNSYLVANIA

Dwn. SLAGLE
Date 12-11-07
Engr. J.Kraus
Sheet 1 of 1

Description Low Pass EMI Filter

51-353-080
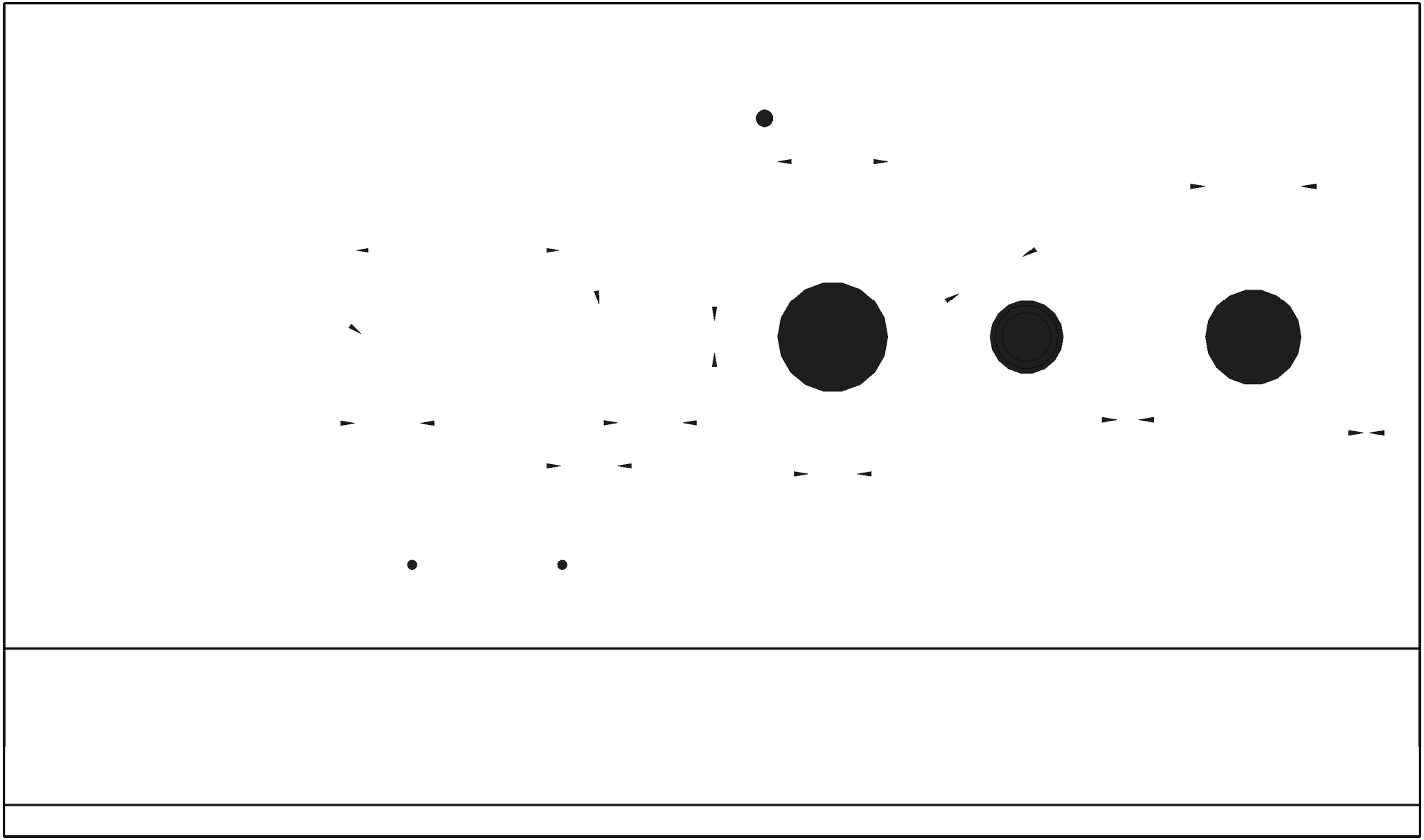
Quality Products From The Specialists In Electro-Magnetic Compatibility