THIS DRAWING IS THE PROPERTY OF FAIRCHILD SEMICONDUCTOR CORPORATION. NO USE THEREOF SHALL BE MADE OTHER THAN AS A REFERENCE FOR PROPOSALS AS SUBMITTED TO FAIRCHILD SEMICONDUCTOR CORPORATION FOR JOBS TO BE EXECUTED IN CONFORMITY WITH SUCH PROPOSALS UNLESS THE CONSENT OF SAID FAIRCHILD SEMICONDUCTOR CORPORATION HAS PREVIOUSLY BEEN OBTAINED. NO PART OF THIS DRAWING SHALL BE COPIED OR DUPLICATED OR ITS CONTENTS DISCLOSED. THE INFORMATION CONTAINED ON THIS DRAWING IS CONFIDENTIAL AND PROPRIETARY.

REVISIONS

NBR	DESCRIPTION	DATE	BY/APP'D
1	RELEASED TO DCC	19MAY2008	SDLEE / FSSZ

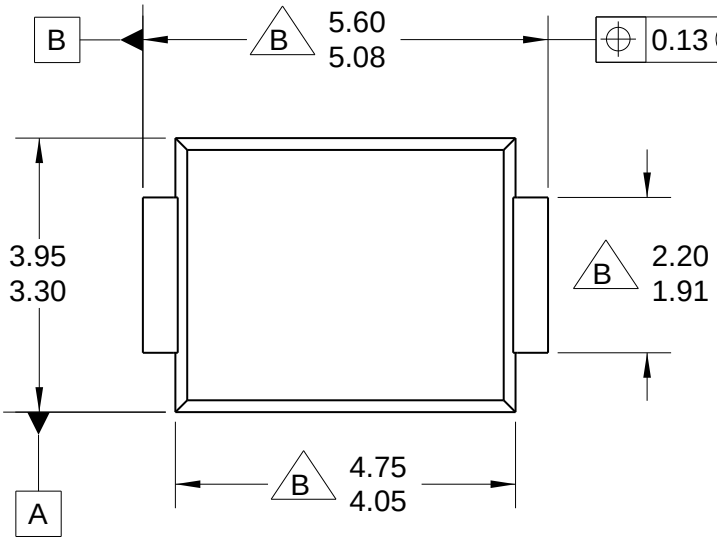

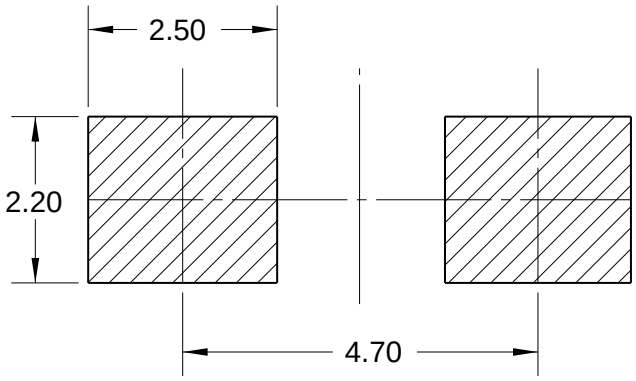

LAND PATTERN RECOMMENDATION

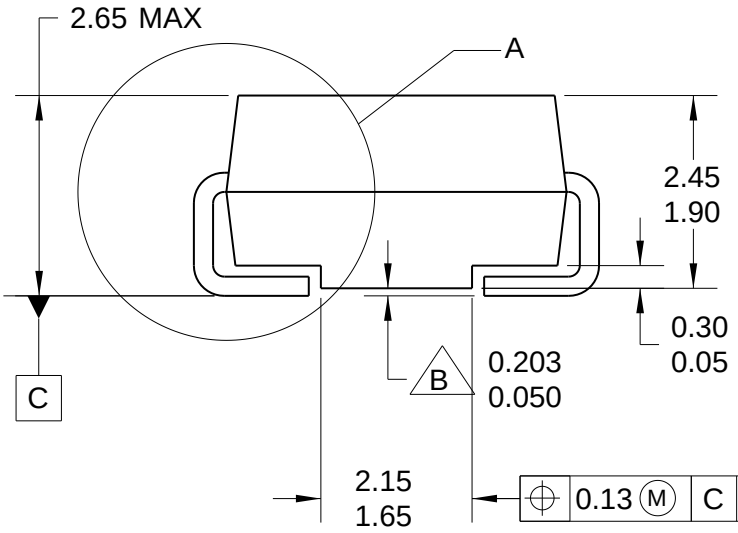

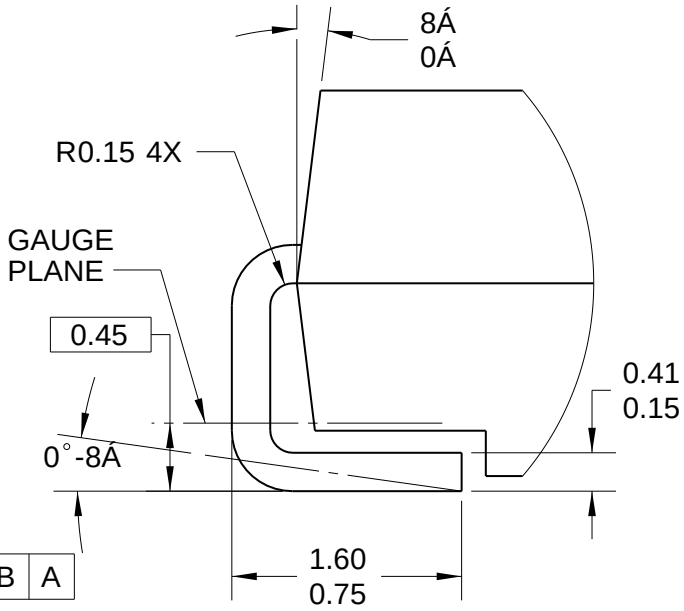

DETAIL A
SCALE 20 : 1

NOTES:

A. EXCEPT WHERE NOTED CONFORMS TO JEDEC DO214 VARIATION AA.
B. DOES NOT COMPLY JEDEC STD. VALUE.
C. ALL DIMENSIONS ARE IN MILLIMETERS.
D. DIMENSIONS ARE EXCLUSIVE OF BURRS, MOLD FLASH AND TIE BAR PROTRUSIONS.
E. DIMENSION AND TOLERANCE AS PER ASME Y14.5-1994.
F. LAND PATTERN STD. DIOM5336X240M.
G. DRAWING FILE NAME: DO214AAREV1

APPROVALS	DATE
DRAWN: BOBOY MALDO	19MAY2008
CHECKED: SD LEE	
APPROVED: FRED REN	
APPROVED: HOWARD ALLEN	

PROJECTION [MM] INCH

FAIRCHILD SEMICONDUCTOR™

2LD, SMB, JEDEC
DO214 VARIATION AA

SCALE	SIZE	DRAWING NUMBER	REV
1:1	N/A	MKT-DO214AA	1

FORMERLY: N/A

SHEET : 1 OF 1