CASE FINISH	CURRENT (AMPS)	WORKING VOLTAGE -55°C TO +85°C AC	WORKING VOLTAGE -55°C TO +85°C DC	WORKING VOLTAGE -55°C TO +125°C AC	WORKING VOLTAGE -55°C TO +125°C DC	MAXIMUM DC RESISTANCE (OHMS)	MAXIMUM VOLTAGE DROP DC	MAXIMUM VOLTAGE DROP AC	MINIMUM CAPACITANCE (uF)	MIN. INSERTION LOSS PER MIL-STD-220 FULL LOAD, +25°C 14 KHz	30 KHz	50 KHz	75 KHz	100 KHz	150 KHz	300 KHz	500 KHz	1 MHz	10 MHz	100 MHz	1 GHz	10 GHz
SOLDER	1	240@400Hz	450 ◆4	240@400Hz	400 ◆4	0.60	0.60	---	0.36	--	7	--	--	--	43	60	--	70	70	70	70	--

PART MARKING:

51-321-610
SCI DATE CODE

PACKAGE MARKING:

STANDARD

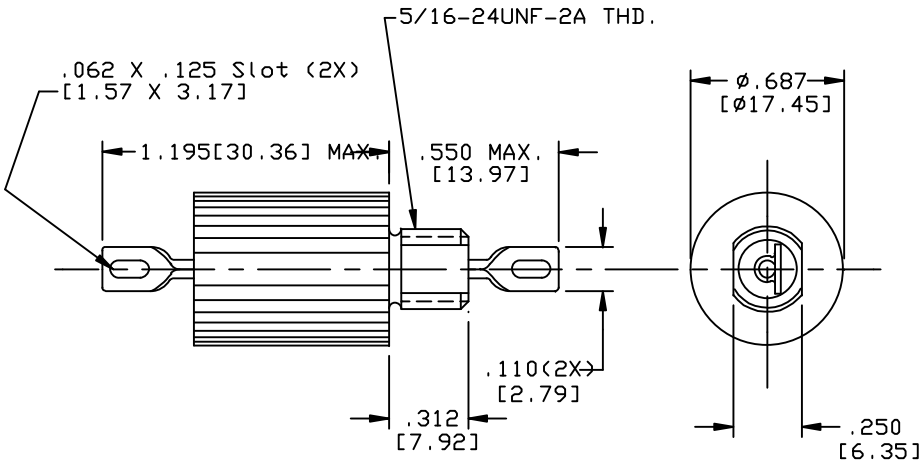

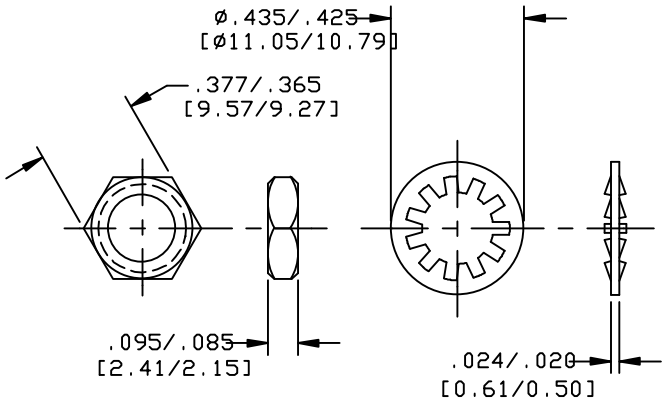

SCHEMATIC

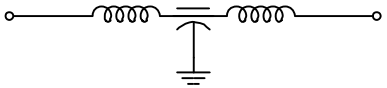

MTG. HARDWARE

MARKING NOTES:

N/A

NOTES:

1) MOUNTING TORQUE NOT TO EXCEED 7in-lbs.

REV. NO.	CHANGE NOTICE NO.
41	CN 188542
40	CN. 173375

UNLESS OTHERWISE SPECIFIED DIMENSIONS ARE IN INCHES. [MILLIMETERS] DO NOT SCALE.

TOLERANCES UNLESS OTHERWISE SPECIFIED
Fractions
Dec. .xx±
Dec. .xxx±010
Angles ±0° 30'
CODE IDENT. NO. OLSP2

SPECTRUM CONTROL INC.

Dwn KAUFFMAN
Ckd 5-15-96
Apvd.
Sheet 1 of 1

ERIE, FAIRVIEW PENNSYLVANIA

Description Low Pass EMI Filter

51-321-610

Quality Products From The Specialists In Electro-Magnetic Compatibility